NOTE:-THIS DRAWING IS BEST READ ON A3 SIZE SHEET

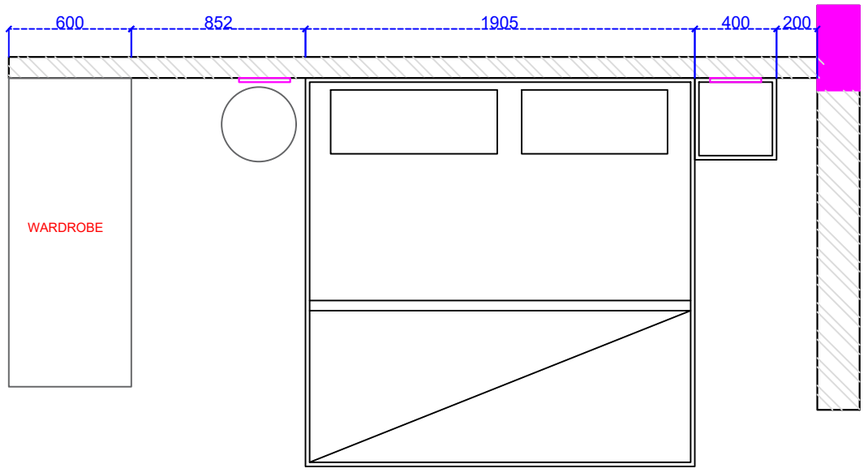

GUEST BEDROOM @GF BED PLAN

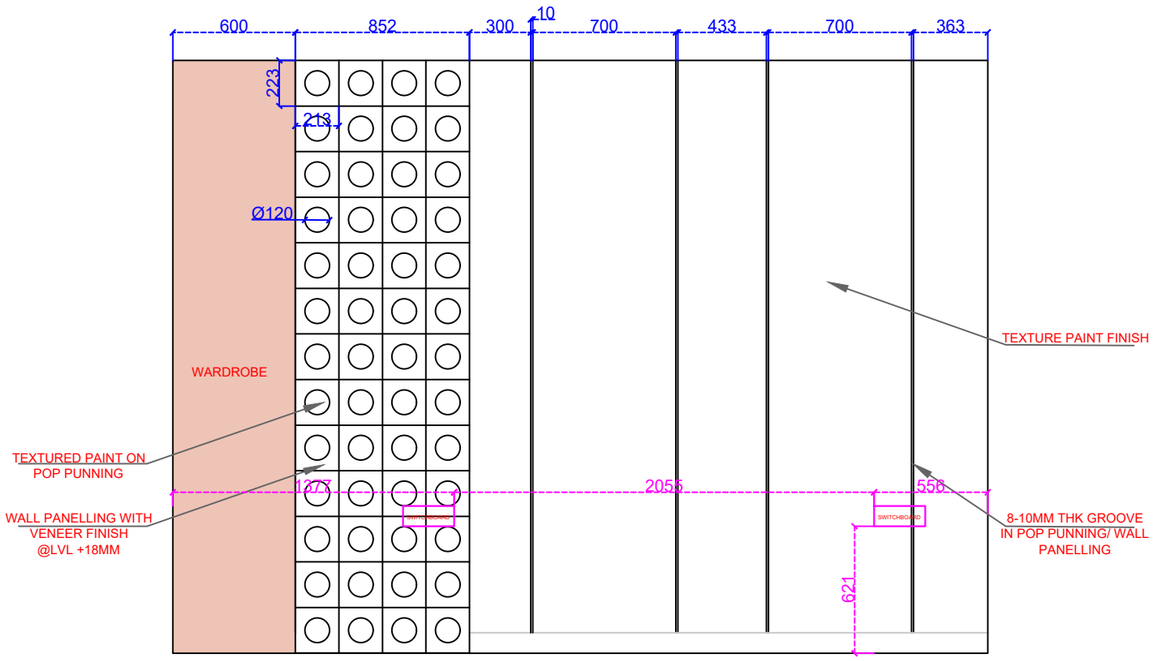

GUEST BEDROOM @GF BED BACK ELEVATION



PROJECT TITLE

VASUDEV VILLA
MR. & MRS. GOPAL, VRINDAVAN

ALL DESIGNS & DRAWINGS ARE THE PROPERTY OF SHADOWSLANE FIRM AND SHALL NOT BE USED, COPIED OR REPRODUCED WITHOUT THEIR WRITTEN PERMISSION. COPYRIGHT OF THIS DRAWING BELONGS TO SHADOWSLANE FIRM AND THE DRAWING MUST BE RETURNED AFTER COMPLETION OF WORK AT SITE.

NOTES:

ALL DIMENSIONS ON THIS DRAWING ARE IN mm ONLY WRITTEN DIMENSIONS ARE TO BE FOLLOWED. DRAWINGS SHOULD NOT BE SCALED UNDER ANY CIRCUMSTANCES.ALL MEASUREMENTS MUST BE CHECKED AND VERIFIED BY THE CONTRACTORS PRIOR TO EXECUTION OF WORK AT THE SITE.THIS DRAWING IS TO BE READ IN CONJUNCTION WITH ALL RELEVANT STRUCTURAL, SERVICES & FACILITY PLANNING DRAWINGS.ARCHITECTURAL DRAWINGS ARE TO BE FOLLOWED FOR THE LOCATION OF ALL STRUCTURAL MEMBERS & MASONRY WALLS.FOR SIZES & REINFORCEMENT DETAILS OF STRUCTURAL MEMBERS, RELEVANT STRUCTURAL DRAWINGS ARE TO BE REFERRED.ANY DISCREPANCIES BETWEEN ARCHITECTURAL, STRUCTURAL AND SERVICES DRAWINGS MUST BE BROUGHT TO THE NOTICE OF THE ARCHITECTS IMMEDIATELY & PRIOR TO EXECUTION AT SITE. CO-ORDINATION WITH THE SERVICES SUCH AS HVAC, PLUMBING & ELECTRICAL ETC. IS THE RESPONSIBILITY OF THE CONTRACTORS. ALL MASONRY WALLS SHOULD BE ALGINED WITH THE COLUMNS AS INDICATED ON THE PLAN, IRRESPECTIVE OF THE FOR DETAILS, REFER RELEVANT LARGE SCALE DETAIL DRGS. AS INDICATED.

LEGEND:

REVISIONS

S.NO.	DESCRIPTION	DATE
1.		
2.		
3.		

SIGN

- ☐ FOR TENDER
- ☐ FOR INFORMATION
- ☐ FOR EXECUTION
- ■ FOR APPROVAL

ARCHITECTS
SHADOWS
PLOT NO.- 1094
SECTOR 46
GURUGRAM-HARYANA
PH:- 8368358038, 8076383861
EMAIL:-taru@shadowslane.com
sarthak@shadowslane.com

Head-
GUEST BEDROOM @GF

BED BACK DESIGN
PLAN & ELEVATION

DRAWING NUMBER
AR-11

DESIGNED BY:
RIDDHI SORTE

CHECKED BY:
AR. TARU RAJVANSHI

DATE
18.07.2026

NOTE:-THIS DRAWING IS BEST READ ON A3 SIZE SHEET

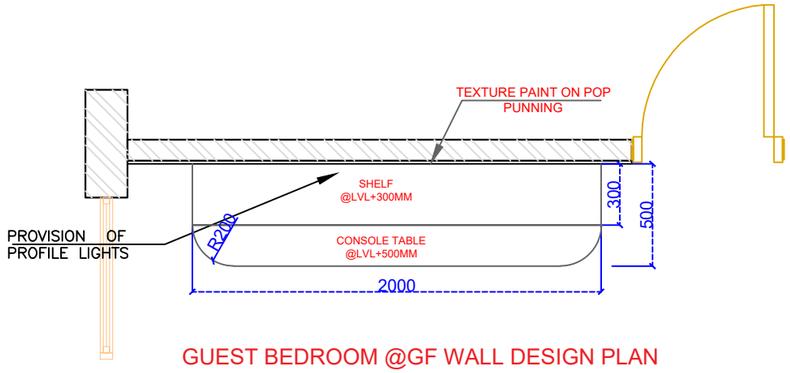

GUEST BEDROOM @GF WALL DESIGN PLAN



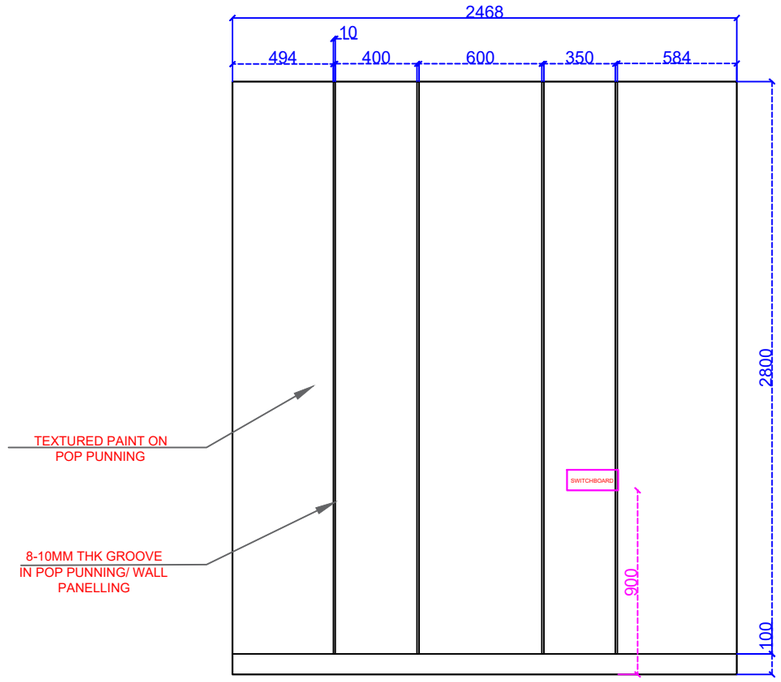

GUEST BEDROOM @GF WALL DESIGN ELEVATION

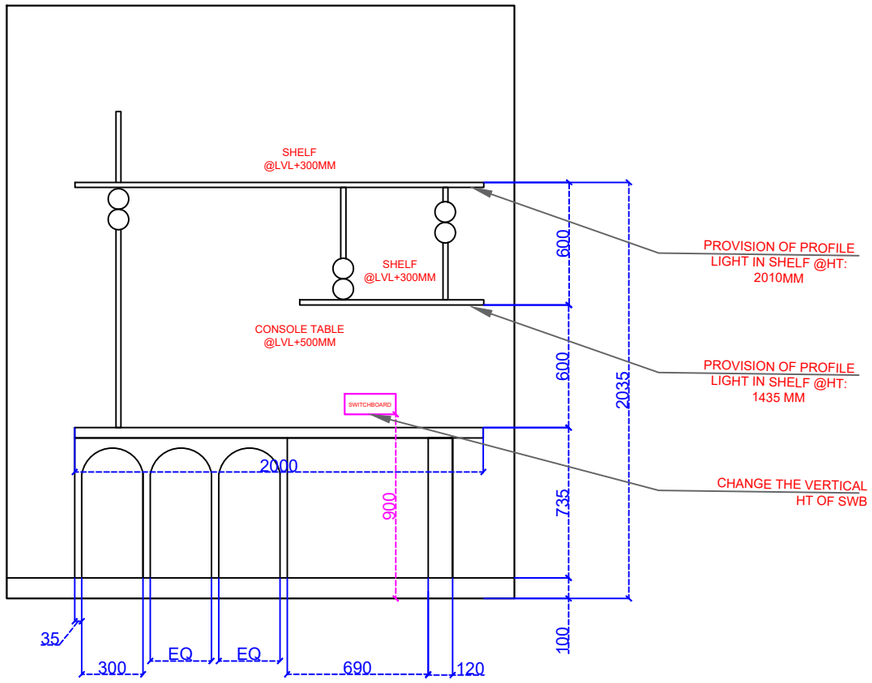

GUEST BEDROOM @GF CONSOLE ELEVATION

PROJECT TITLE

VASUDEV VILLA
MR. & MRS. GOPAL, VRINDAVAN

ALL DESIGNS & DRAWINGS ARE THE PROPERTY OF SHADOWSLANE FIRM AND SHALL NOT BE USED, COPIED OR REPRODUCED WITHOUT THEIR WRITTEN PERMISSION. COPYRIGHT OF THIS DRAWING BELONGS TO SHADOWSLANE FIRM AND THE DRAWING MUST BE RETURNED AFTER COMPLETION OF WORK AT SITE.

NOTES:

ALL DIMENSIONS ON THIS DRAWING ARE IN mm ONLY WRITTEN DIMENSIONS ARE TO BE FOLLOWED. DRAWINGS SHOULD NOT BE SCALED UNDER ANY CIRCUMSTANCES.ALL MEASUREMENTS MUST BE CHECKED AND VERIFIED BY THE CONTRACTORS PRIOR TO EXECUTION OF WORK AT THE SITE.THIS DRAWING IS TO BE READ IN CONJUNCTION WITH ALL RELEVANT STRUCTURAL, SERVICES & FACILITY PLANNING DRAWINGS.ARCHITECTURAL DRAWINGS ARE TO BE FOLLOWED FOR THE LOCATION OF ALL STRUCTURAL MEMBERS & MASONRY WALLS.FOR SIZES & REINFORCEMENT DETAILS OF STRUCTURAL MEMBERS, RELEVANT STRUCTURAL DRAWINGS ARE TO BE REFERRED.ANY DESCREPANCIES BETWEEN ARCHITECTURAL, STRUCTURAL AND SERVICES DRAWINGS MUST BE BROUGHT TO THE NOTICE OF THE ARCHITECTS IMMEDIATELY & PRIOR TO EXECUTION AT SITE. CO-ORDINATION WITH THE SERVICES SUCH AS HVAC, PLUMBING & ELECTRICAL ETC. IS THE RESPONSIBILITY OF THE CONTRACTORS. ALL MASONRY WALLS SHOULD BE ALIGNED WITH THE COLUMNS AS INDICATED ON THE PLAN, IRRESPECTIVE OF THE FOR DETAILS, REFER RELEVANT LARGE SCALE DETAIL DRGS. AS INDICATED.

LEGEND:

REVISIONS

S.NO.	DESCRIPTION	DATE
1.		
2.		
3.		

SIGN

- ☐ FOR TENDER
- ☐ FOR INFORMATION
- ☐ FOR EXECUTION
- ■ FOR APPROVAL

ARCHITECTS
SHADOWS
PLOT NO.- 1094
SECTOR 46
GURUGRAM-HARYANA
PH:- 8368358038, 8076383861
EMAIL:-taru@shadowslane.com
sarthak@shadowslane.com

Head-
GUEST BEDROOM @GF

WALL DESIGN + CONSOLE
PLAN & ELEVATION

DRAWING NUMBER

AR-12

DESIGNED BY:

RIDDHI SORTE

CHECKED BY:

AR. TARU RAJVANSHI

DATE

18.07.2026